## XGE..R..ZWD - Gerader Einschraubstutzen

Zöll. Einschraubzapfen mit WD (ISO 1179) / 24°-Anschluss

## XGE..R..ZWD - Straight male stud connector

thread: BSP parallel with captive seal (ISO 1179) / 24° cone end

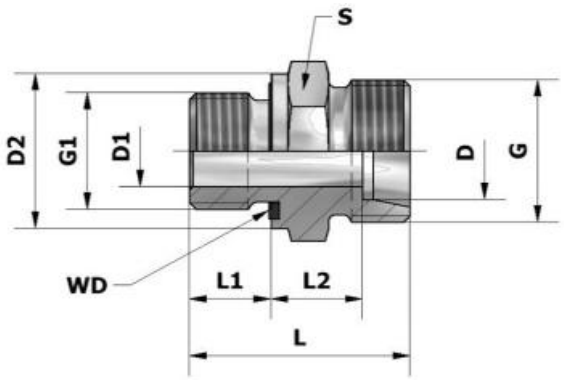


| Reihe series | | D | G | G1 | D1 | D2 | L | L1 | L2 | S | Gewicht weight kg/100 | Artikelnummernreihe 15DHY-GExREDOMD |
|---|---|---|---|---|---|---|---|---|---|---|---|---|
| PN 500 | L | 6 | M12x1,5 | G ⅛ A | 4 | 14 | 23,5 | 8,0 | 8,5 | 14 | 1,30 | |
| PN 500 | | 8 | M14x1,5 | G ¼ A | 6 | 19 | 29,0 | 12,0 | 10,0 | 19 | 2,70 | |
| PN 420 | | 8 | M14x1,5 | G ⅜ A | 6 | 22 | 30,5 | 12,0 | 11,5 | 22 | 4,50 | |
| PN 500 | | 10 | M16x1,5 | G ¼ A | 6 | 19 | 30,0 | 12,0 | 11,0 | 19 | 2,90 | |
| PN 420 | | 10 | M16x1,5 | G ⅜ A | 8 | 22 | 31,5 | 12,0 | 12,5 | 22 | 4,30 | |
| PN 400 | | 12 | M18x1,5 | G ¼ A | 6 | 19 | 31,0 | 12,0 | 12,0 | 19 | 3,10 | |
| PN 420 | | 12 | M18x1,5 | G ⅜ A | 9 | 22 | 31,5 | 12,0 | 12,5 | 22 | 4,10 | |
| PN 400 | | 12 | M18x1,5 | G ½ A | 10 | 27 | 34,0 | 14,0 | 13,0 | 27 | 6,70 | |
| PN 400 | | 15 | M22x1,5 | G ½ A | 11 | 27 | 35,0 | 14,0 | 14,0 | 27 | 7,20 | |
| PN 400 | | 18 | M26x1,5 | G ½ A | 14 | 27 | 36,0 | 14,0 | 14,5 | 27 | 7,10 | |
| PN 250 | | 18 | M26x1,5 | G ¾ A | 15 | 32 | 38,0 | 16,0 | 14,5 | 32 | 11,00 | |
| | | 22 | M30x2 | G ¾ A | 18 | 32 | 40,0 | 16,0 | 16,5 | 32 | 10,20 | |
| | | 28 | M36x2 | G 1 A | 23 | 40 | 43,0 | 18,0 | 17,5 | 41 | 17,00 | |
| | | 35 | M45x2 | G 1¼ A | 30 | 50 | 48,0 | 20,0 | 17,5 | 50 | 27,20 | |
| | | 42 | M52x2 | G 1½ A | 36 | 55 | 52,0 | 22,0 | 19,0 | 55 | 34,3 | |

Serienmäßig mit Weichdichtung aus NBR / Auf Wunsch mit FKM lieferbar
Supplied with fitted NBR-sealing / FKM on request

## XGE..R..ZWD - Gerader Einschraubstutzen

Zöll. Einschraubzapfen mit WD (ISO 1179) / 24°-Anschluss

## XGE..R..ZWD - Straight male stud connector

thread: BSP parallel with captive seal (ISO 1179) / 24° cone end

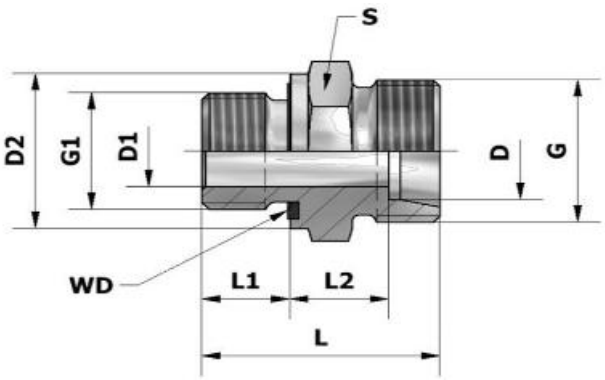


| Reihe series | | D | G | G1 | D1 | D2 | L | L1 | L2 | S | Gewicht weight kg/100 | Artikelnummernreihe 15DHY-GExREDOMD |
|---|---|---|---|---|---|---|---|---|---|---|---|---|
| PN 630 | S | 6 | M14x1,5 | G ¼ A | 4 | 19 | 32,0 | 12 | 13,0 | 19 | 3,50 | |
| PN 800 | | 8 | M16x1,5 | G ¼ A | 5 | 19 | 34,0 | 12 | 15,0 | 19 | 4,10 | |
| PN 800 | | 10 | M18x1,5 | G ¼ A | 5 | 19 | 34,0 | 12 | 14,5 | 19 | 4,20 | |
| | | 10 | M18x1,5 | G ⅜ A | 7 | 22 | 34,5 | 12 | 15,0 | 22 | 4,50 | |
| PN 630 | | 12 | M20x1,5 | G ⅜ A | 8 | 22 | 36,5 | 12 | 17,0 | 22 | 6,20 | |
| | | 12 | M20x1,5 | G ½ A | 8 | 27 | 39,0 | 14 | 17,5 | 27 | 9,90 | |
| | | 16 | M24x1,5 | G ½ A | 12 | 27 | 41,0 | 14 | 18,5 | 27 | 9,10 | |
| PN 420 | | 16 | M24x1,5 | G ¾ A | 12 | 32 | 45,0 | 16 | 20,5 | 27 | 15,20 | |
| | | 20 | M30x2 | G ¾ A | 16 | 32 | 47,0 | 16 | 20,5 | 32 | 14,90 | |
| | | 25 | M36x2 | G ¾ A | 16 | 32 | 51,0 | 16 | 23,0 | 41 | 25,50 | |
| | | 25 | M36x2 | G 1 A | 20 | 40 | 53,0 | 18 | 23,0 | 41 | 26,60 | |
| PN 420 | | 30 | M42x2 | G 1¼ A | 25 | 50 | 57,0 | 20 | 23,5 | 50 | 41,80 | |
| PN 420 | | 38 | M52x2 | G 1½ A | 32 | 55 | 64,0 | 22 | 26,0 | 55 | 56,30 | |

Serienmäßig mit Weichdichtung aus NBR / Auf Wunsch mit FKM lieferbar
Supplied with fitted NBR-sealing / FKM on request